Wastewater System/Chicago Drive (M-121) Sewer

Ottawa County Road Commission/
Georgetown Charter Township

Preliminary Engineering Report

September 2016

2150472

Table of Contents

I. INTRODUCTION 1

II. FLOW EVALUATION 1

III. GEORGETOWN CHARTER TOWNSHIP MASTER PLAN 2

IV. CLOSED CIRCUIT TELEVISION (CCTV) INSPECTION 3

V. SHORT-TERM VS LONG-TERM OPTIONS 4

A. Design 4
B. Odor Control 5
C. Damage Repair 6
D. Increased Capacity 6

VI. CONCLUSIONS AND RECOMMENDATIONS 6

VII. COST ESTIMATES 7

Tables

Table 1 .....M-121 Sewer Capacity
Table 2 .....Projection Summary
Table 3 .....Existing Sewer Capacity
Table 4 .....Cost Estimates

Figures

Figure 1 .....Trunk Sewers
Figure 2 .....Service Area
Figure 3 …….. Proposed Project Area
Figure 4 .....Sewer Profile
Figure 5 .....Vortex Flow Insert Profile

Appendix

Appendix A.....CCTV Inspection

I. INTRODUCTION

In 1969, with financial assistance from the Ottawa County Road Commission, a wastewater collection system was constructed to serve the City of Hudsonville and most of the developed area in Georgetown Charter Township. Since that time, the collection system has been expanded to serve more developing areas within the City of Hudsonville and Georgetown Charter Township. In addition, service has been extended to portions of Jamestown Township and Blendon Township.

The collection system is comprised of collector sewers, lift stations and trunk sewers that deliver the wastewater to the City of Grandville Clean Water Plant.

Odor complaints along Chicago Drive (M-121) resulted in an investigation and report by Prein&Newhof dated November, 2015. Subsequent closed-circuit television (CCTV) inspection of the trunk sewer confirmed that serious corrosion of the sewer pipe and manholes was taking place in the M-121 trunk sewer downstream from the force main discharge (See Appendix A). Specifically, corrosion has progressed to beyond an estimated 50% of wall thickness in the vicinity of two drop structures. The level of corrosion suggests that it has been occurring for some time. Based on the odor study and the CCTV results, it is apparent that further action is required to address the condition of the sewer.

The November, 2015 report identified some options for odor control and/or repair/reconstruction of the sewer. This report is intended to be a preliminary design report for that work.

II. FLOW EVALUATION

Flow data from the various lift stations and flow meters are incomplete. However, enough data is available to estimate current flows. Commonly accepted multipliers were used to develop

future peak hour flows using a time range of 50 years. Table 1 was prepared using this approach to develop a projected future maximum capacity of the M-121 sewer ranging from 12.6 mgd to 16.1 mgd, depending on which multiplier is used for future growth.

Table 2 summarizes the projections from the Prein&Newhof report Rusk Creek Trunk Sewer System, Capacity Study dated November, 2008 (2080685). That report estimated the maximum flow rate in the M-121 sewer would be 14.2 mgd.

Based on the data described above, it is recommended that trunk sewer replacement on M-121 provide for capacity of 16 mgd.

Figure 1 shows the various trunk sewers that are referred to in this report.

Figure 2 shows the various drainage basins that the sewers serve. This figure does not include any area served in the City of Hudsonville or Jamestown Township. However, these flows are metered and have capacity limitations by contract.

III. GEORGETOWN CHARTER TOWNSHIP MASTER PLAN

A review of previous Georgetown Charter Township master planning did not produce any changes. The existing sewer, lift station and force main configuration and master planning for build out in Georgetown Charter Township appears to be adequate to provide full service.

Capacities in the lift stations and trunk sewers should be monitored as development occurs particularly in the northwest portion of the Township. The Township is planning to make improvements in 2018 for its Maplewood lift station to increase capacity. The force main and receiving sewer should also be evaluated.

The planned overflow from the Hudsonville/Rush Creek Trunk sewer to the M-121 lift station, as discussed in the Rush Creek Trunk Sewer System Capacity Study of November 2008, should be implemented to relieve the Rush Creek Trunk sewer if that becomes necessary in the future.

IV. CLOSED CIRCUIT TELEVISION (CCTV) INSPECTION

The recent CCTV inspection of the sewer revealed corrosion throughout the concrete sewer pipe in varying degrees. The extent of the damage is described for four locations:

- MH 2443 to 2442. This is the first section of sewer downstream of the forcemain discharge. This pipe in this location is corroded to the point of showing exposed reinforcing steel at multiple locations as illustrated in Appendix A. Repair or replacement of this section of sewer should be done as soon as possible to avoid a collapse.

- MH 2442 to MH 2435. This represents approximately 2,300 feet of sewer beginning at the above referenced section, continuing downstream to the drop manhole at Cottonwood Drive (MH2435). This section of sewer is severely corroded, though not to the point of showing exposed reinforcing steel. Repair or replacement of this section of sewer should be planned as a near term project.

- MH 2435 to MH 2412. This is the first section of sewer downstream of the drop manhole at Cottonwood Drive (MH 2435). This is the most severely damaged section among those that were inspected. This pipe has multiple locations with exposed reinforcing steel as well as joint sealing gaskets which have come loose from the pipe wall and are hanging into the pipe. Repair or replacement of this section of sewer should be done as soon as possible to avoid a collapse.

- MH 2412 to MH 2419. This represents approximately 1,600 feet of sewer from the above referenced section, continuing downstream to the Rush Creek crossing. The corrosion in this sewer is less severe than the others, though still a concern in the long term and will eventually need to be replaced.

V. LONG-TERM VS SHORT-TERM OPTIONS

A. Design

There are three major considerations for the design of the sewer repair/replacement as follows:

- Control of odors and corrosion caused by H_2S predominately at the forcemain discharge and at the drop in grade (drop) at Cottonwood Drive.
- Corrosion caused damage repair which is urgent downstream from the drop at Cottonwood Drive and at the force main discharge.
- Increased capacity in the replacement sewer to provide for 16 mgd predicted maximum flow.

A vortex flow insert (VFI) manufactured by Ipex has been identified as a good option to provide aeration of the wastewater and reduce the formation and release of the odorous H_2S. For the VFI to function properly, a drop is needed across the VFI unit. See Figure 4 which is a profile showing the drop in the pipe inverts. Figure 5 illustrates the VFI unit itself.

An 8 foot drop is required for 8 mgd capacity. A second, parallel unit could be installed later as the flow in the sewer increases.

To obtain an 8 foot drop, the sewer will need to be laid at a lower slope. Figure 4 illustrates the profile of the ground, the existing sewer and the proposed new sewer.

The sewer downstream from the drop at Cottonwood Drive is in worst condition and should be replaced as soon as possible. This sewer was constructed in 1981. The force main was added to the system in 2010. This difference in age probably accounts for the greater damage to the sewer below Cottonwood Drive drop.

The location of the replacement sewer in the right-of-way should be evaluated during the final design. It will likely need to be in the same location as the existing sewer because of other utilities around it. Bypass pumping and/or flow diversion to the Rush Creek Trunk and the 12th Avenue Lift Station during the construction will likely be required.

Consideration was given to extending the force main approximately 2,000 feet to increase the capacity of the system. That would create a high point near the present termination of the force main. An air release valve would be required which would then also release odors which would need to be controlled by activated carbon or a biofilter. In addition, there would still be H_2S release at the end of the force main which would require additional sewer replacement.

B. Odor Control

Since H_2S is being released at the end of the force main and at the drop sections, odor is occurring in these locations. Therefore it is recommended that corrective action take place. This will involve installation of a VFI unit at the end of the force main and reconstruction of the sewer downstream for approximately 3,000 feet to the Cottonwood Drive drop. Corrosion resistant sewers and manholes should be used. If odors persist, a biofilter with positive ventilation will be required.

C. Damage Repair

A sewer downstream from the Cottonwood Drive drop is the most seriously damaged and is likely to collapse in the near future. It is recommended that the sewer downstream from the Cottonwood Drive drop be replaced for approximately 2,200 feet. This will allow the drop to be increased in height from the present 5 feet to 8 feet in the event another VFI unit is needed at this location. Corrosion resistant sewers and manholes should be used.

D. Increased Capacity

When the sewers are replaced, 36-inch pipe is recommended at the grades shown on Figure 4. This will allow for future capacity at 16 mgd.

VI. CONCLUSIONS AND RECOMMENDATIONS

Based on the data above, the following steps are recommended.

A. Replace approximately 2,200 lineal feet of sewer downstream from the Cottonwood Drive drop. The pipe should be sized at 36 inches to meet the master plan capacity of 16 mgd using corrosion resistant materials.

B. Install a Vortex flow insert (VFI) in manhole 2443.

C. Replace approximately 3,000 lineal feet of corroded sewer downstream from the force main discharge to the Cottonwood Drive drop.

D. In the event the VFI unit does not adequately control the release of H_2S at the force main discharge, consideration should be given to construction of a biofilter with positive forced air ventilation of the sewer. This is a longer term option that is not likely to be required. Also, if odors persist of the Cottonwood Drive drop, a VFI unit could be installed there. This also is a long-term option that is not likely to be required.

E. It is recommended that the entire project be constructed at once since the sewer downstream from the force main discharge should be replaced for odor control and damage repair and the sewer downstream from the Cottonwood Drive drop should be replaced because of severe damage from corrosion.

VII. COST ESTIMATES

A project cost estimate has been prepared based on recent construction cost including allowance for contingencies, engineering and administrative expenses.

The estimated project cost is $4.87 million. A detailed estimate is shown on Table 4.

Tables

OCRC/Georgetown Charter Township
Preliminary Engineering Report
M-121 Sewer Capacity
Table 1

	Current Avg Day Flow (gpm)	Current Avg Day Flow (mgd)	50 years 1.5% growth	50 years 2.0% growth	50 years 2.5% growth			
Chicago Drive (M121) PS	1800	2.6	5.5	7.0	8.9			
Peaking factor		2.7	2.3	2.2	2.1			
Est. Max Day (mgd)		**7.0**	**12.6**	**15.3**	**18.7**			

	Current Service Area (AC)	Current Avg Day Flow (gpm)	Current Avg Day Flow (mgd)	Avg Day GPD/AC	Ultimate Service Area (AC)	Ultimate Avg Day Flow (gpm)	Ultimate Avg Day Flow (MGD)	**Est Ultimate Max Day (MGD)**
Chicago Drive (M121) PS	4510[(1)]				10460	5085	7.322	**16.1**
assumed dev. (80%)	3608	1800	2.6	718				
[(1)]*Includes the current service areas of Hidden Lakes, Port Sheldon, and Pleasant View pump stations; upstream of M121 pump station*								
12th Ave PS	1900				2400			
assumed dev. (80%)	1520	690	1.0	654				
Use 700 GPD/AC for assumptions								

without Blendon Township (2560 acres)

	Current Service Area (AC)	Current Avg Day Flow (gpm)	Current Avg Day Flow (mgd)	GPD/AC	Ultimate Service Area (AC)	Ultimate Avg Day Flow (gpm)	Ultimate Avg Day Flow (MGD)	**Est Ultimate Max Day (MGD)**
Chicago Drive (M121) PS	4510				7900	3840	5.53	**12.7**
assumed dev. (80%)	3608	1800	2.6	718				
12th Ave PS	1900				2400			
assumed dev. (80%)	1520	690	1.0	654				
Use 700 GPD/AC for assumptions								

OCRC/Georgetown Charter Township
Preliminary Engineering Report
M-121 Sewer Capacity
November 2008 Report
Table 2

Port Sheldon CtTrunk

		Present		Future		Lift Station
		Avg (mgd)	Peak (mgd)	Avg (mgd)	Peak (mgd)	M-121
	Theor.	1.3	3.6			
	70%	0.9	2.7	2.7	6.8	
	Meter	1	2.1	3.7	9.0	9.0
22nd Ave	J.T.	0.08	0.3		2.6	
	GT	0.07	0.3	0.45	1.5	
	Comb.		0.6		4.1	4.1

Hudsonville Trunk

(Ownership)		JT		0.2	
		Hudsonville		2.06	
		Comb.		2.26	
			Overflow		1.12
				LS M-121	14.2 mgd

Rush Creek

24"	4.14 mgd	
30"	6.51	
36"	8.64	8.21

*Rush Creek Trunk Sewer System, Capacity Study, November 2008 (2080685)

OCRC/Georgetown Charter Township
Preliminary Engineering Report
Existing Sewer Capacity
Sewer Capacity M-121
Table 3

		GPM	MGD	CFS
1.	Lift Station		7.4	22.0
2.	24" at 0.3%	5,500	7.9	12.2
3.	24" at 0.88%	9,500	13.6	21.0
4.	27" at 0.16%	5,800	8.3	12.8
5.	30" at 0.36%	10,100	14.4	22.3

OCRC/Georgetown Charter Township
Preliminary Engineering Report
M-121 Trunk Sewer Rehabilitation
Construction Estimate - Entire Project
Table 4

M121 Trunk Sewer Rehabilitation Construction Estimate - Entire Project

Item	Description	Quantity	Unit	Unit Price	Amount
1	By-pass Pumping	1	Lsum	$ 300,000	$ 300,000
2	Structure Removal	16	ea.	$ 1,000	$ 16,000
3	Sanitary Sewer Removal	5200	l.f.	$ 30	$ 156,000
4	36" Sanitary Sewer	5200	l.f.	$ 340	$ 1,768,000
5	Sanitary Sewer Manhole	14	ea.	$ 40,000	$ 560,000
6	Sanitary Sewer Drop Manhole	1	ea.	$ 50,000	$ 50,000
7	Lateral Connections	23	ea.	$ 1,000	$ 23,000
8	Vortex Flow Insert	1	ea.	$ 200,000	$ 200,000
9	Remove and Replace 36" Storm Sewer	600	l.f.	$ 180	$ 108,000
10	Remove and Replace 12"-24" Storm Sewer	400	l.f.	$ 80	$ 32,000
11	Concrete Curb and Gutter	3500	l.f.	$ 35	$ 122,500
12	Concrete Sidewalk	3500	s.f.	$ 8	$ 28,000
13	7" MDOT 22A Gravel Base	6000	s.y.	$ 15	$ 90,000
14	Driveway Replacment MDOT 13A HMA (165#/sy each course/2 courses)	650	ton	$ 120	$ 78,000
15	Road Replacement (550#/sy)	350	ton	$ 120	$ 42,000
16	River Crossing	1	Lsum	$ 70,000	$ 70,000
17	Topsoil, Seed and Mulch	1	Lsum	$ 50,000	$ 50,000
18	Landscaping	1	Lsum	$ 5,000	$ 5,000
19	Parking/Street Light R/R	12	ea.	$ 2,000	$ 24,000
20	Signal/Ped Signal R/R	6	ea.	$ 2,500	$ 15,000
21	Traffic Loop	3	ea.	$ 4,000	$ 12,000
22	Electrical Control Box R/R	2	ea.	$ 3,000	$ 6,000
23	Business Sign R/R	6	Lsum	$ 15,000	$ 90,000
24	Traffic Control	1	Lsum	$ 50,000	$ 50,000
	Estimated Construction Total				***$ 3,895,500***
	Estimated Engineering and Contingency				***$ 974,500***
	Estimate Total Project Cost				***$ 4,870,000***

Figures

CRYSTAL AVENUE LIFT STATION

PIONEER MSU LIFT STATION

M-121 TRUNK SEWER

12TH AVENUE LIFT STATION

RUSH CREEK TRUNK SEWER

HUDSONVILLE/RUSH CREEK TRUNK SEWER

M-121 LIFT STATION

22ND AVENUE TRUNK SEWER

Rosewood Street

Port Sheldon St.

Chicago Drive

Edson Drive

44th Street

Van Buren Street

McClelland Street

28th Avenue

20th Avenue

12th Avenue

16th Avenue

14th Avenue

8th Avenue

Port Sheldon Street

Kenowa Avenue

Kent County

7200

6400

5600

LEGEND

Gravity Sewers

Hudsonville/Rush Creek Trunk Sewer

22nd Avenue Trunk Sewer

M-121 Trunk Sewer

SCALE: 1 " = 1,500 '

OTTAWA COUNTY ROAD COMMISSION

OTTAWA COUNTY, MICHIGAN

TRUNK SEWERS

FIGURE 1

Prein&Newhof

2150472

J:\GIS_Client\Ottawa-GD\00-CO_Proj\2150472_OCRC_M-121 Lift Station\2150472_Figure 1_Trunk Sewers.mxd - PNIEJD - 8/11/2016 9:58:57 AM

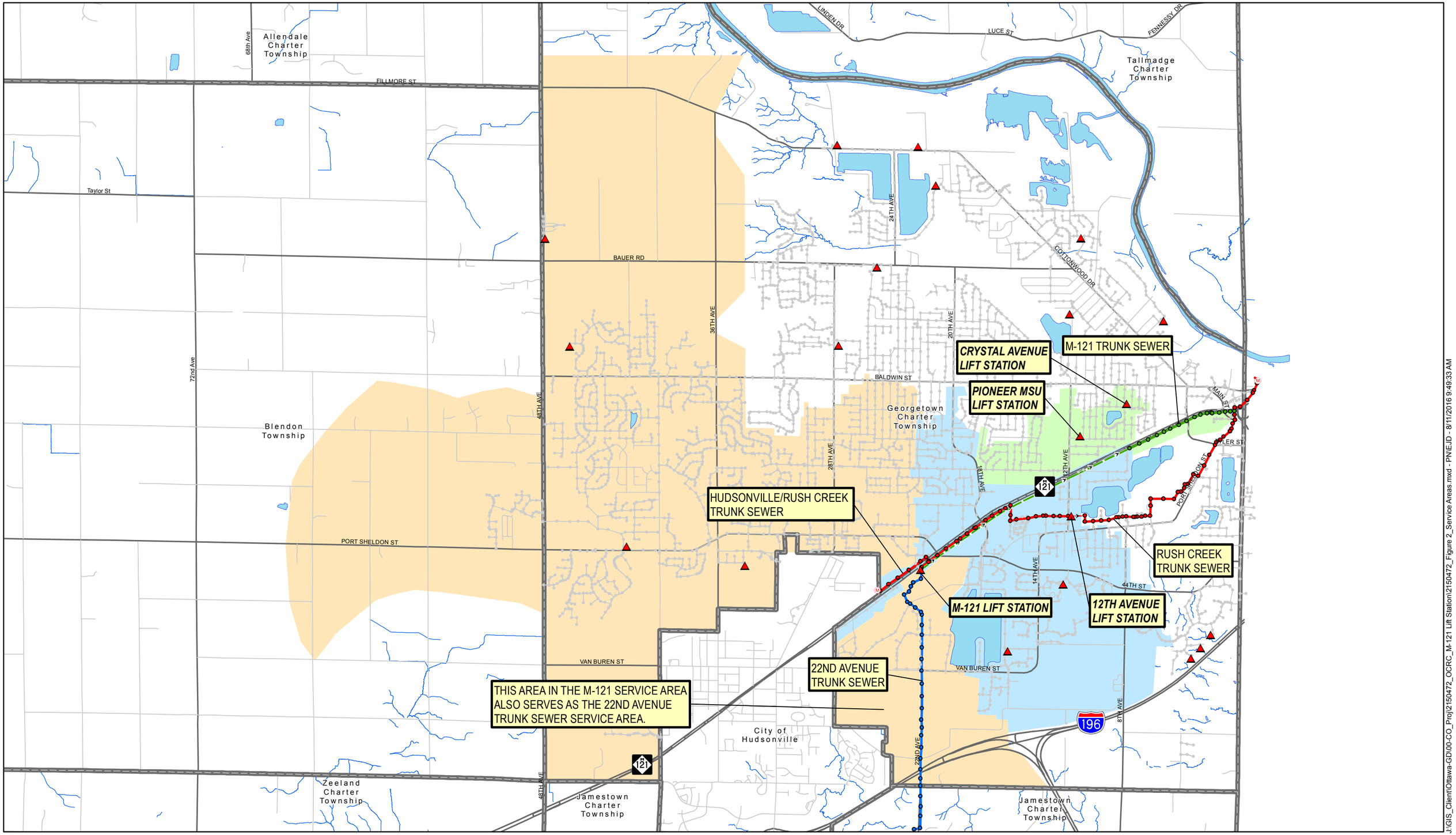

J:\GIS_Client\Ottawa-GD\00-CO_Proj\2150472_OCRC_M-121 Lift Station\2150472_Figure 2_Service Areas.mxd - PNIEJD - 8/11/2016 9:49:33 AM

SCALE: 1 " = 4,000 '

LEGEND

- M-121 Gravity Service Area (Includes Pioneer MSU & Crystal Avenue L.S. Service Areas)
- Ultimate 12th Avenue L.S. Georgetown Service Area
- Ultimate M-121 L.S. Georgetown Service Area

OTTAWA COUNTY ROAD COMMISSION

OTTAWA COUNTY, MICHIGAN

SERVICE AREAS

FIGURE 2

Prein&Newhof

2150472

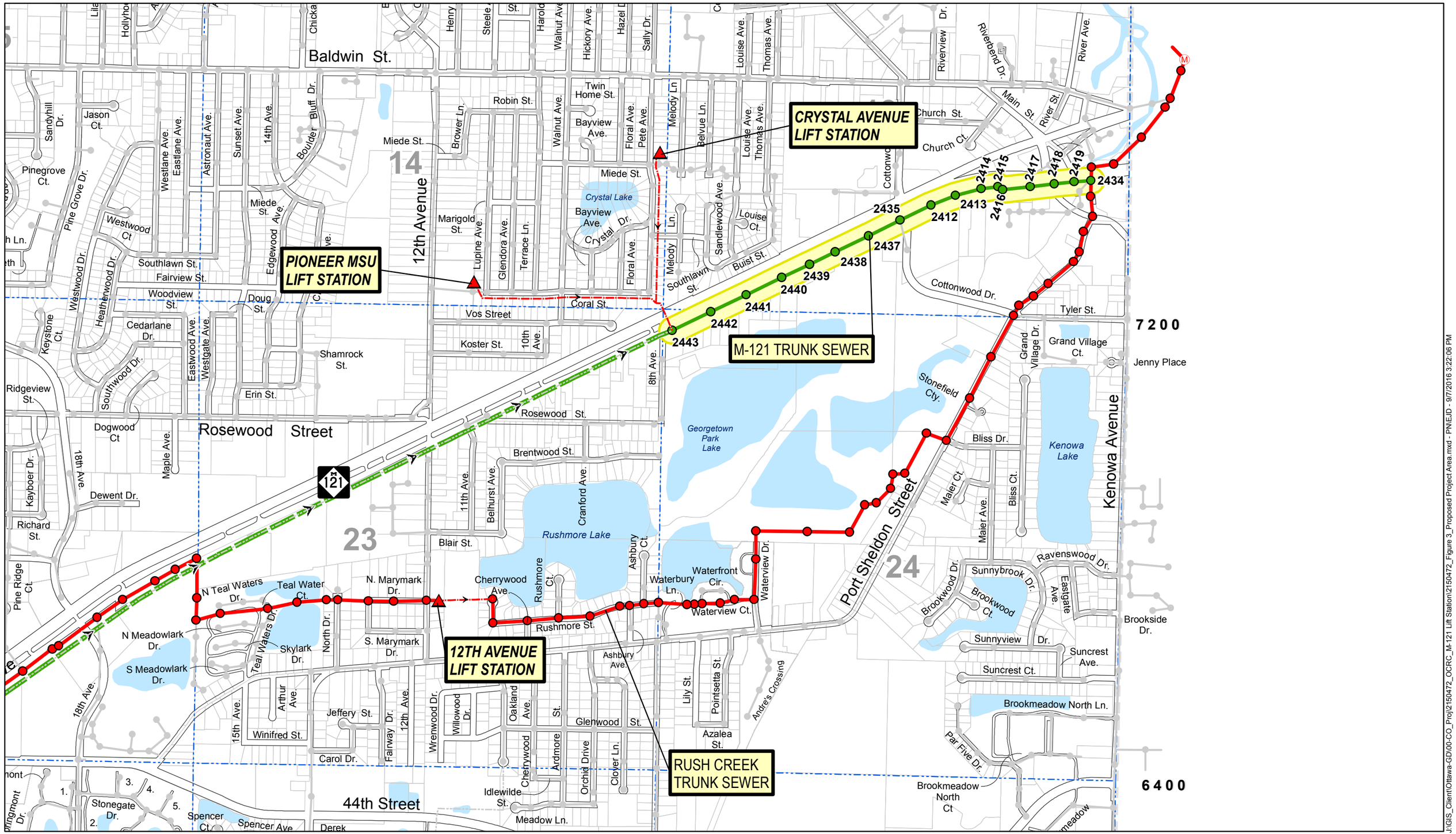

SCALE: 1 " = 1,000 '

LEGEND

- Gravity Sewers
- Hudsonville/Rush Creek Trunk Sewer
- Proposed Project Area
- 22nd Avenue Trunk Sewer
- M-121 Trunk Sewer

OTTAWA COUNTY ROAD COMMISSION
OTTAWA COUNTY, MICHIGAN

PROPOSED PROJECT AREA

FIGURE 3

Prein&Newhof

2150472

J:\GIS_Client\Ottawa-GD\00-CO_Proj\2150472_OCRC_M-121 Lift Station\2150472_Figure 3_Proposed Project Area.mxd - PNI\EJD - 9/7/2016 3:22:06 PM

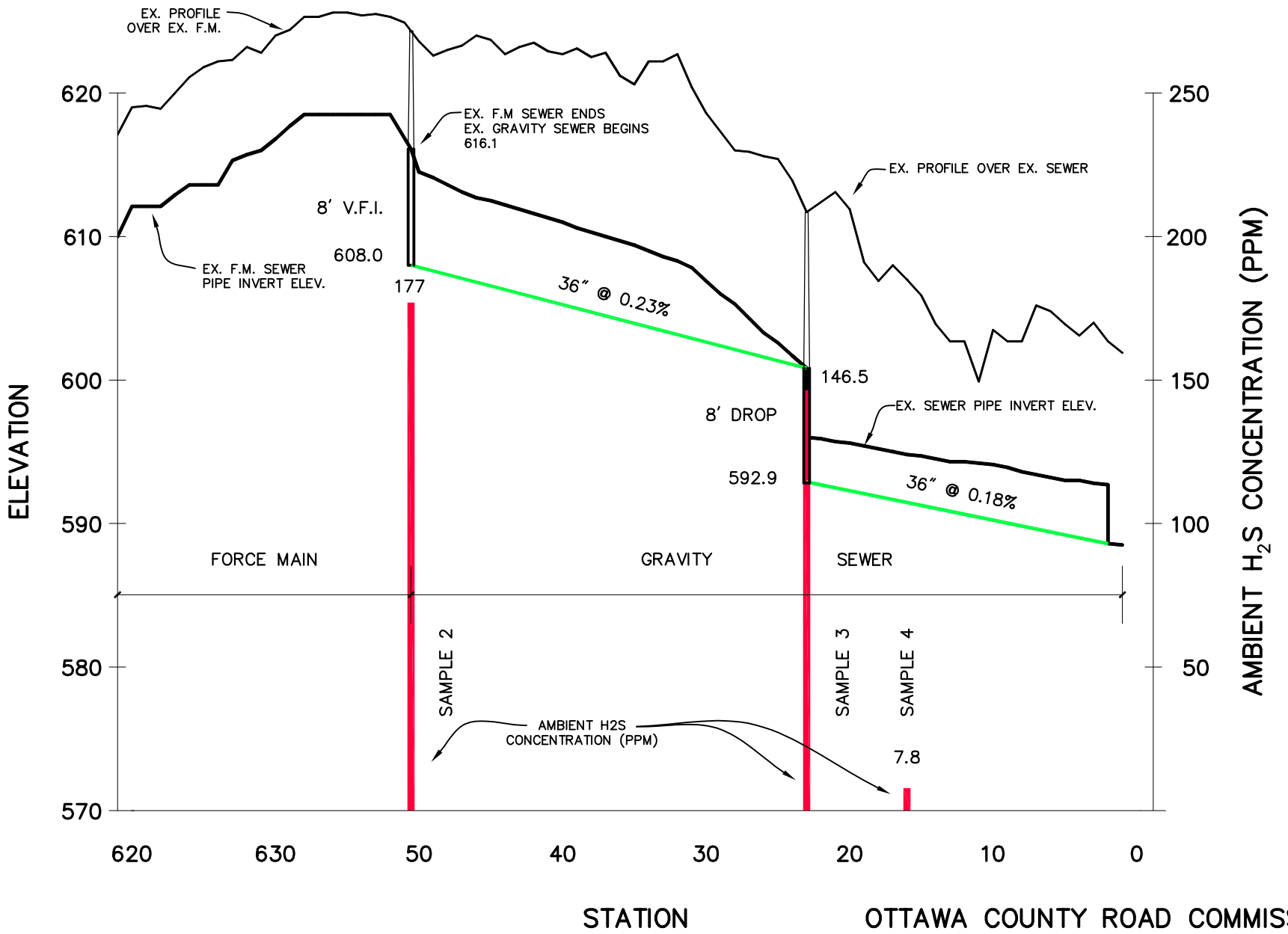

1000' 0' 1000' 2000' 3000'

SCALES:
HORZ. 1" = 1000'
VERT. 1" = 10'

OTTAWA COUNTY ROAD COMMISSION
OTTAWA COUNTY, MICHIGAN

M-121 TRUNK SEWER

PROFILE

FIGURE 4

Prein&Newhof
2150472

NAME	MATERIAL	PROPERTIES
VORTEX FORM	42" CIOD PVC PIPE AWWA C905	O.D. 44.5"
VORTEX SHAFT	18" CIOD PVC PIPE AWWA C905	O.D. 19.5"
VORTEX EDP	42" CIOD PVC PIPE AWWA C905	O.D. 44.5"

FORCE MAIN DESIGN

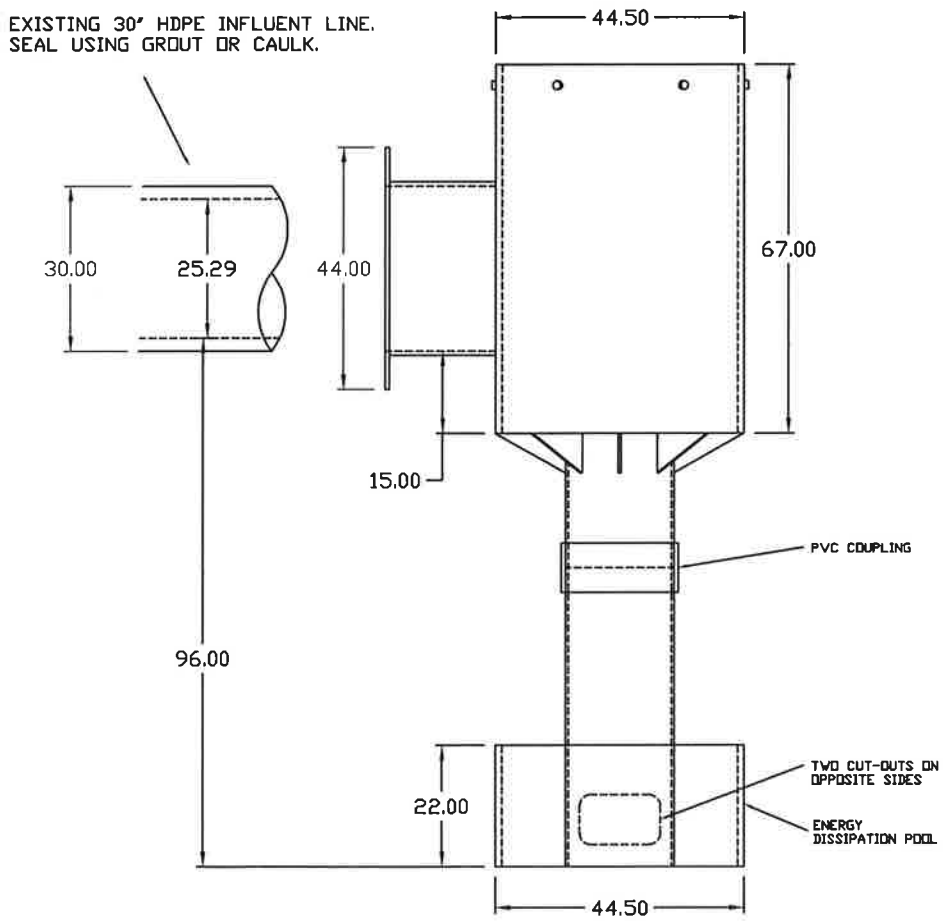

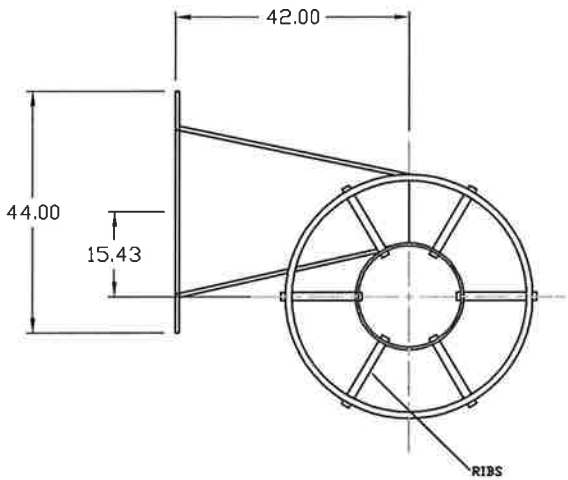

VORTEX DESIGNED FOR A PEAK FLOW OF: **7.4 MGD**
(AS SPECIFIED BY OTHERS)

DIMENSIONS IN INCHES UNLESS OTHERWISE SPECIFIED

VORTEX APPROX. DRY WEIGHT: **1200 LBS**

IPEX

REV.	DATE	DESCRIPTION

CUSTOMER
OTTAWA COUNTY ROAD COMMISSION
PREIN & NEWHOF - THOMAS NEWHOF

VORTEX FLOW INSERT

DRAWING TITLE
GEORGETOWN TRUNK SEWER
GEORGETOWN TOWNSHIP, MI

DWG #	DATE	DRAWN BY	SCALE	SHEET	REV
MIKK17-2	09/02/16	MDB	NTS	1/1	

Figure 5

Appendix A

CCTV Inspection

Appendix A
Georgetown Charter Township
CCTV Inspection

The condition information for the Chicago Drive sewer is attached. The lines highlighted in blue were televised by Plummers in March of this year. The sewer from MH3872 to MH2400 appears to be vylon pipe in good condition. The sewer from MH2443 to MH2418 is concrete pipe with a continuous corrosion problem. The most severe corrosion is within first 100 feet downstream of MH2435, where it is corroded to the point of exposing the reinforcing steel and a couple of pipe gaskets are hanging (see pictures 2-6). A similar but less severe issue is just downstream of MH2443 (see picture 1). The rest of the concrete pipe is all corroding as well, but not to the point of showing the steel or gaskets yet.

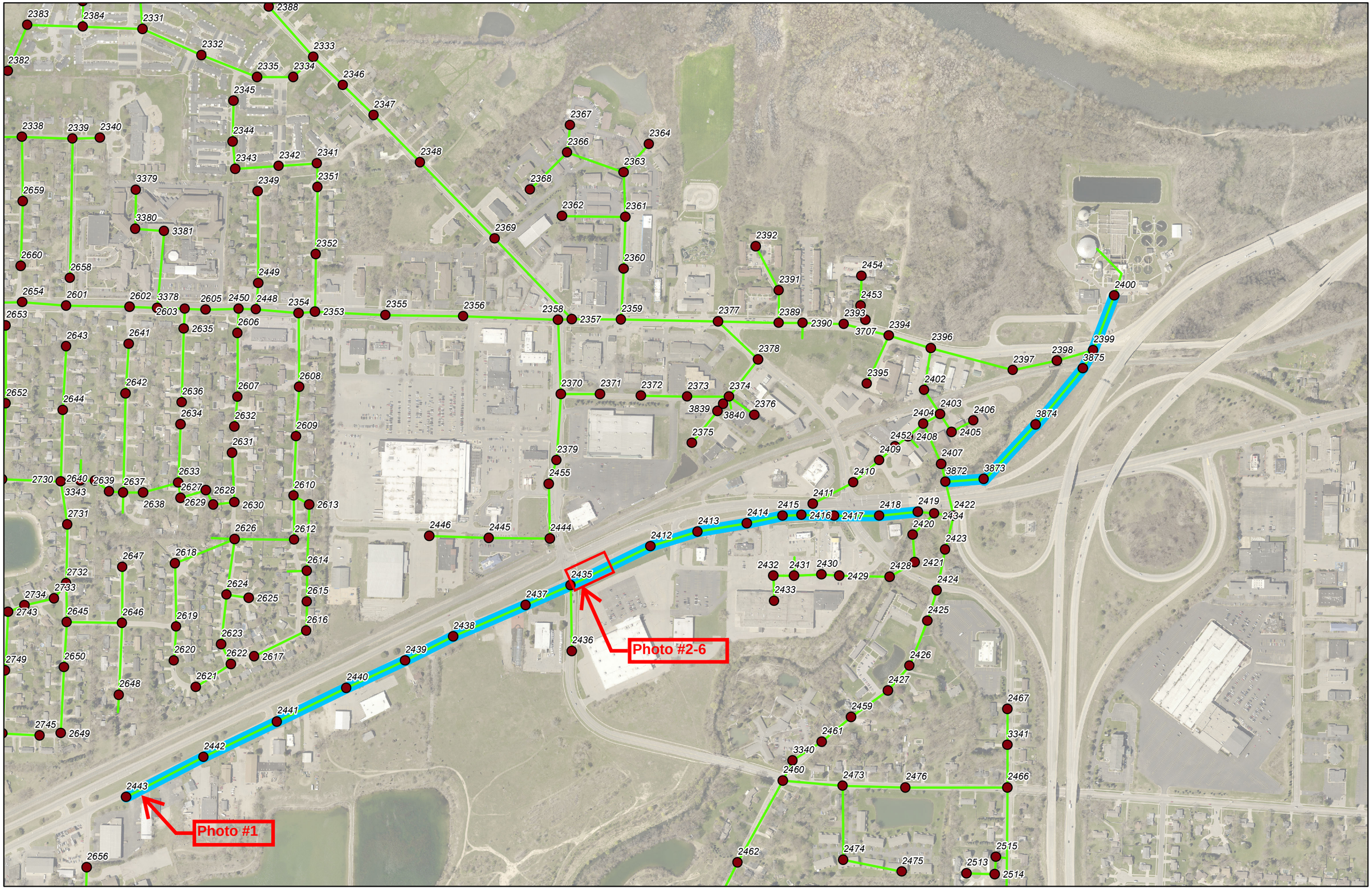

1 inch = 500 feet

Photo #1

MH2443 to MH2442

Photo #2

MH2435 to MH2412

Photo #3

MH2435 to MH2412

Photo #4

MH2435 to MH2412

Photo #5

MH2435 to MH2412

Photo #6

MH2435 to MH2412