Georgetown Charter Township

1515 Baldwin St., Jenison, MI 49428

Finance Committee Meeting Agenda

February 5, 2020, 8:15 a.m.

1. Call To Order
2. Roll Call
3. Approval Of The Minutes Of The Previous Meeting
4. Liquor License (LIQ2001) For WM Family Fun LLC (Rebounders WM – Family Entertainment Center)

   Motion: To recommend to the Township Board to approve the resolution for the (LIQ2001) liquor license **for WM Family Fun LLC (Rebounders WM – Family Entertainment Center), Richard VanDyke**, 7500 Cottonwood, P.P. # 70-14-13-402-008.

   Note: all necessary materials have been submitted, including the liquor license application.

   Documents:

   MLCC LOCAL APPROVAL RESOLUTION.PDF
   LIQ2001 APPLICATION.PDF
   BUILDING DRAWING - CURRENT EDITED 1-17-20.PDF

5. Review Lighting Fixture For Township Office Lobby

   Documents:

   LOBBY LIGHT FIXTURE.PDF

6. Review Township Office/Library HVAC PM Quote
7. Purchase DPW 2020 Pick-Up

   Documents:

   2020 DPW PICK-UP TRUCK BID TAB.PDF

8. A Veteran Helping Veteran Raffle License

   Documents:

   GEORGETOWN RAFFLE LICENSE LETTER.PDF

9. Communications, Letters And Reports

10. Public Comments
11. Other Business
12. Adjournment

Michigan Department of Licensing and Regulatory Affairs
Liquor Control Commission (MLCC)
Toll Free: 866-813-0011 • www.michigan.gov/lcc

Business ID: _____

Request ID: _____
(For MLCC use only)

Local Government Approval

(Authorized by MCL 436.1501)

Instructions for Applicants:

- You must obtain a recommendation from the local legislative body for a new on-premises license application, certain types of license classification transfers, and/or a new banquet facility permit.

Instructions for Local Legislative Body:

- Complete this resolution or provide a resolution, along with certification from the clerk or adopted minutes from the meeting at which this request was considered.

At a _____ meeting of the _____ council/board
(regular or special) (township, city, village)

called to order by _____ on _____ at _____
(date) (time)

the following resolution was offered:

Moved by _____ and supported by _____

that the application from _____
(name of applicant - if a corporation or limited liability company, please state the company name)

for the following license(s): _____
(list specific licenses requested)

to be located at: _____

and the following permit, if applied for:

☐ Banquet Facility Permit Address of Banquet Facility: _____

It is the consensus of this body that it _____ this application be considered for
(recommends/does not recommend)

approval by the Michigan Liquor Control Commission.

If disapproved, the reasons for disapproval are _____

Vote

Yeas: _____

Nays: _____

Absent: _____

I hereby certify that the foregoing is true and is a complete copy of the resolution offered and adopted by the _____ (township, city, village)

council/board at a _____ meeting held on _____
(regular or special) (date)

_____	_____	_____
Print Name of Clerk	Signature of Clerk	Date

Under Article IV, Section 40, of the Constitution of Michigan (1963), the Commission shall exercise complete control of the alcoholic beverage traffic within this state, including the retail sales thereof, subject to statutory limitations. Further, the Commission shall have the sole right, power, and duty to control the alcoholic beverage traffic and traffic in other alcoholic liquor within this state, including the licensure of businesses and individuals.

Please return this completed form along with any corresponding documents to:
Michigan Liquor Control Commission
Mailing address: P.O. Box 30005, Lansing, MI 48909
Hand deliveries or overnight packages: Constitution Hall - 525 W. Allegan, Lansing, MI 48933
Fax to: 517-763-0059

LARA is an equal opportunity employer/program.Auxiliary aids, services and other reasonable accommodations are available upon request to individuals with disabilities.

Date received_____ New application_____ Renewal (Feb 1)_____ Transfer_____

LIQUOR LICENSE APPLICATION--Identification number:_____

Georgetown Charter Township, 1515 Baldwin St., P.O. Box 769, Jenison MI 49429
616-457-2340

revised: 1/20/09

APPLICANT INFORMATION

INDIVIDUAL OR CO-PARTNERSHIP OR CORPORATION NAME: WM Family Fun LLC	PHONE: 616-455-5600
APPLICANT NAME: Richard Van Dyke	TITLE: Owner / COO
ADDRESS: 7500 Cottonwood	CITY / STATE / ZIP: Jenison MI 49428

PROPERTY INFORMATION

COMPANY NAME and CHARACTER OF BUSINESS: Rebounderz WM - Family Entertainment Center	PHONE: 616-455-5600
OWNER / AGENT NAME: Richard Van Dyke	TITLE: Owner / COO
ADDRESS: 7500 Cottonwood	CITY / STATE / ZIP: Jenison MI 49428
PARCEL NUMBER: 70-14-13-402-008	ZONING DISTRICT:

ADDITIONAL INFORMATION

LENGTH OF TIME APPLICANT HAS BEEN IN BUSINESS: 4 years

HAS THE APPLICANT MADE APPLICATION FOR A SIMILAR OR OTHER LICENSE ON THE PREMISES IF YES, EXPLAIN. No

HAS THE APPLICANT EVER BEEN CONVICTED OF A FELONY OR IS THE APPLICANT DISQUALIFIED TO RECEIVE A LICENSE BY REASON OF ANY MATTER OR THING CONTAINED IN THIS ORDINANCE OR ANY OTHER LAW OR ORDINANCE? NO

HAS A SIGNED STATEMENT BEEN SUBMITTED THAT STATES THAT THE APPLICANT WILLL NOT VIOLATE ANY LAWS OF THE STATE OF MICHIGAN OR OF THE UNITED STATES OR ANY ORDINANCES OF THE TOWNSHIP IN THE CONDUCT OF BUSINESS? I will not violate the above Richard Van D

HAVE BUILDING PLANS BEEN SUBMITTED SHOWING THE ENTIRE STRUCTURE AND THE SPECIFIC AREAS WHERE THE LICENSE IS TO BE UTILIZED.? YES

HAS A SITE PLAN BEEN SUBMITTED SHOWING THE ENTIRE PREMISES AS PER THE REQUIREMENTS OF THE ORDINANCE? YES

FOR PREMISES PENDING OR UNDER CONSTRUCTION, HAS EVIDENSE BEEN PROVIDED OF THE FINANCIAL CAPABILITY OF THE APPLICANT TO COMPLETE THE DEVELOPMENT? N/A

APPLICANT SIGNATURE

IT IS THE APPLICANT'S RESPONSIBILITY TO MEET THE REQUIREMENTS OF TOWNSHIP ORDINANCE IN ALL RESPECTS AND TO PROVIDE THE NECESSARY INFORMATION TO THE TOWNSHIP FOR APPROVAL. PERMISSION IS GRANTED FOR THE TOWNSHIP STAFF TO ENTER THE SUBJECT PROPERTY FOR PURPOSES OF GATHERING INFORMATION TO REVIEW THIS REQUEST.

APPLICANT SIGNATURE: Richard Van D	DATE: 1-20-2020

FOR OFFICE USE ONLY

APPLICATION COMPLETE?_____ FEE PAID?_____ REVIEW?_____	DATE OF TOWNSHIP BOARD MEETING/PUBLIC HEARING:
TREASURER-ANY PAYMENTS OR OBLIGATIONS OWED TO TOWNSHIP?:	DATE APPLICATION APPROVED (FOR ONE YEAR):

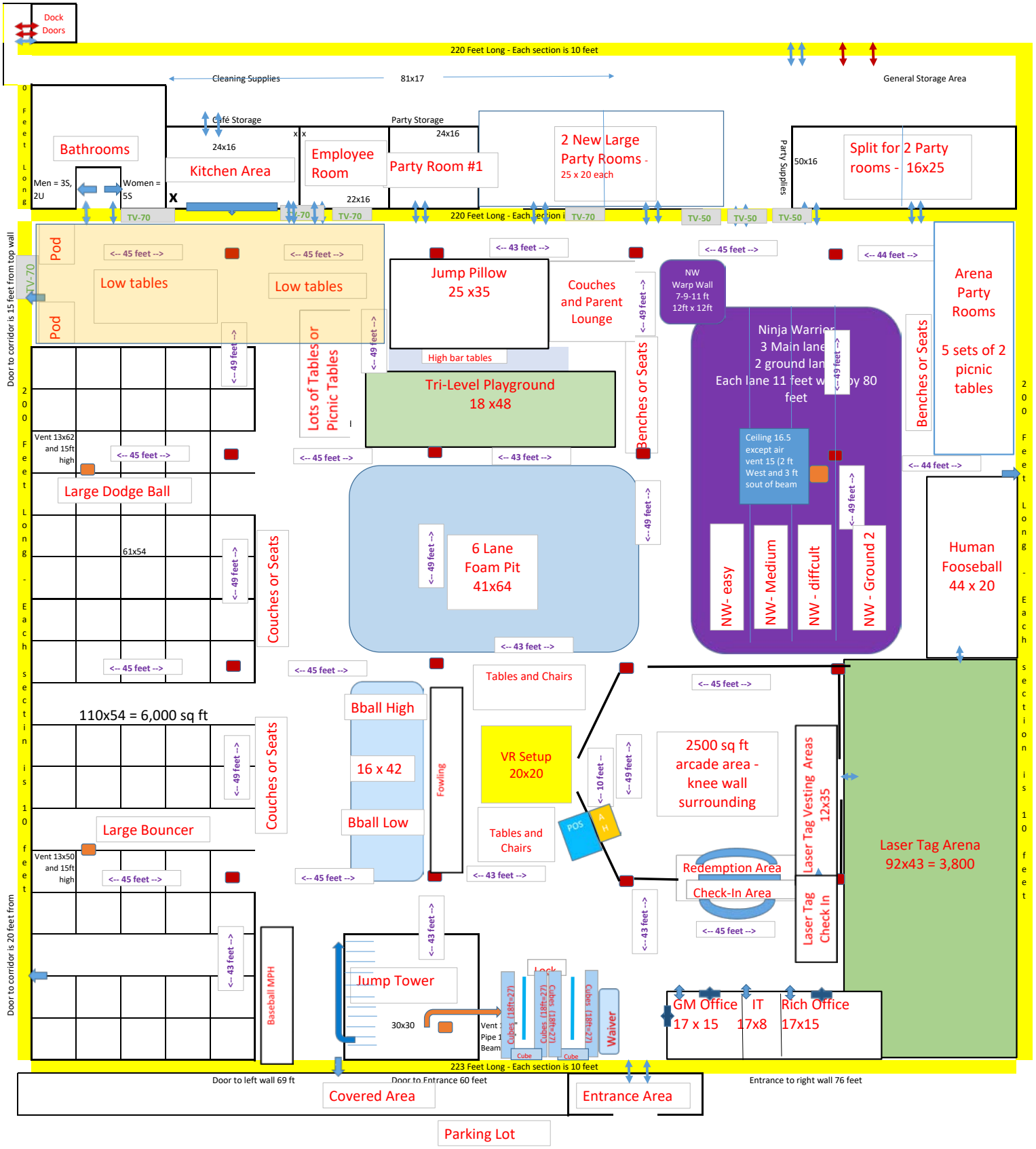
Dock Doors
220 Feet Long - Each section is 10 feet
Cleaning Supplies
81x17
General Storage Area
Café Storage
Party Storage
24x16
24x16
Bathrooms
Kitchen Area
Employee Room
Party Room #1
2 New Large Party Rooms - 25 x 20 each
Party Supplies
50x16
Split for 2 Party rooms - 16x25
Men = 3S, 2U
Women = 5S
22x16
TV-70
TV-50
Pod
Low tables
Low tables
Pod
Jump Pillow 25 x35
Couches and Parent Lounge
NW Warp Wall 7-9-11 ft 12ft x 12ft
Arena Party Rooms
5 sets of 2 picnic tables
Lots of Tables or Picnic Tables
High bar tables
Tri-Level Playground 18 x48
Benches or Seats
Benches or Seats
Ninja Warrior 3 Main lanes 2 ground lanes Each lane 11 feet wide by 80 feet
Ceiling 16.5 except air vent 15 (2 ft West and 3 ft sout of beam
NW- easy
NW- Medium
NW - diffcult
NW - Ground 2
Vent 13x62 and 15ft high
Large Dodge Ball
61x54
Couches or Seats
6 Lane Foam Pit 41x64
Human Fooseball 44 x 20
110x54 = 6,000 sq ft
Couches or Seats
Bball High
16 x 42
Bball Low
Fowling
Tables and Chairs
VR Setup 20x20
Tables and Chairs
POS
2500 sq ft arcade area - knee wall surrounding
Laser Tag Vesting Areas 12x35
Laser Tag Arena 92x43 = 3,800
Large Bouncer
Vent 13x50 and 15ft high
Redemption Area
Check-In Area
Laser Tag Check In
Baseball MPH
Jump Tower
30x30
Cubes (18ft x27)
Waiver
GM Office 17 x 15
IT 17x8
Rich Office 17x15
Door to corridor is 15 feet from top wall
Door to corridor is 20 feet from
200 Feet Long - Each section is 10 feet
223 Feet Long - Each section is 10 feet
Door to left wall 69 ft
Door to Entrance 60 feet
Entrance to right wall 76 feet
Covered Area
Entrance Area
Parking Lot

Submitted by: Elders Electric		Date: January 2020
Type: Option #3-(3) 2' Diameter	Project: Georgetown Township	
Ordering Info: HP 4C D P 2' S 840 F 96 120 SC FC-10% FA50 C4		

BUY AMERICAN ACT OF 2009 COMPLIANT

FINELITE® Better Lighting

High Performance 4" Aperture Circle (HP-4 C)

High Performance 4" Aperture Circle (HP-4 C) is a patented, circular LED luminaire. Constructed with an extruded aluminum body and single-piece diffuser, the HP-4 C provides a seamless finish aesthetic. Delivering excellent performance using an advanced optical design and mid-power LEDs to achieve 90% of initial light output at 100,000+ hours.

Signal White is standard finish

CROSS SECTION

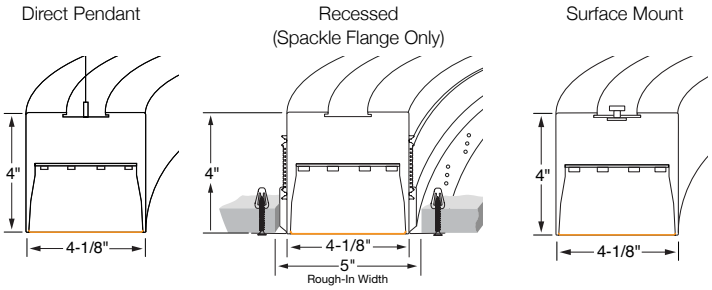

SIZE OPTIONS

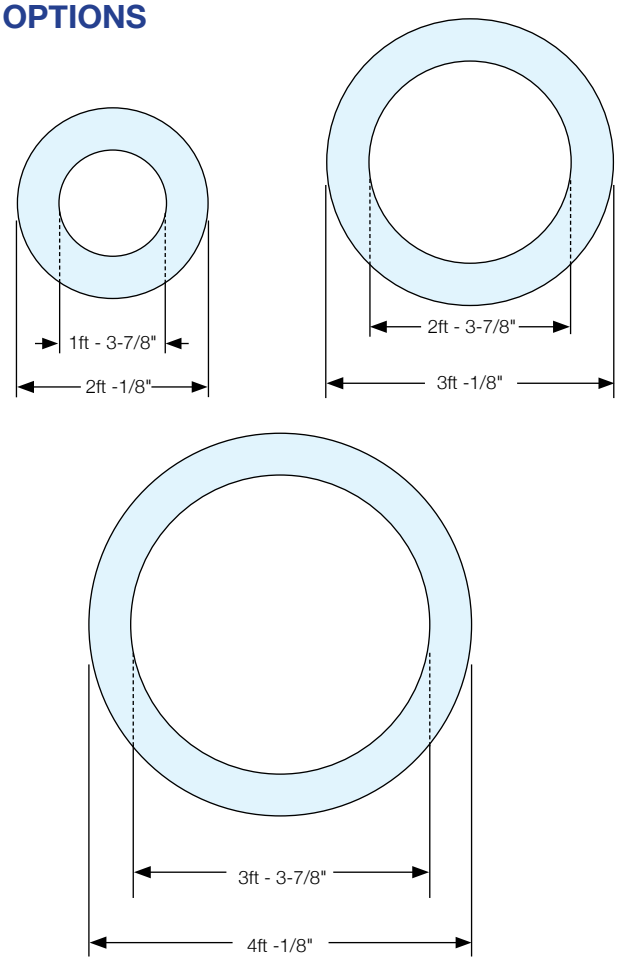

LUMEN OUTPUT PACKAGES

S	B	H	V
Standard	Boosted Standard	High	Very High

Protected by one or more US Patents: 8915613; D702,391; D702,390; D700,732

Finelite, Inc. • 30500 Whipple Road • Union City • CA 94587-1530 • 510-441-1100 • 510-441-1510 • www.finelite.com
© 2019 FINELITE, INC. ALL RIGHTS RESERVED. CTK0227 V3. 12/19
Due to continuing product improvements, Finelite reserves the right to change specifications without notice. Please visit www.finelite.com for the most current data.
A brand of legrand

Submitted by: Elders Electric		Date: January 2020	
Type: Option #3-(3) 2' Diameter	Project: Georgetown Township		
Ordering Info: HP 4C D P 2' S 840 F 96 120 SC FC-10% FA50 C4			

BUY AMERICAN ACT OF 2009 COMPLIANT

FINELITE® Better Lighting

High Performance 4" Aperture Circle (HP-4 C)

Clear Form

BODY TYPE

Platform	Series Name	Luminaire Distribution	Luminaire Type	Size (Diameter) [1]
◉ HP - High Performance	◉ 4 C	◉ D - Direct	◉ P - Pendant ◯ R - Recessed *(Spackle Flange Only)* ◯ SM - Surface Mount	◉ 2' ◯ 3' ◯ 4'

OUTPUT and LED TYPE

Downlight Output [2]	LED CRI/CCT
◉ S - Standard ◯ B - Boosted Standard ◯ H - High ◯ V - Very High ◯ TL - Tailored:_____lm/ft	◯ 830 - 80 CRI, 3000K ◯ 835 - 80 CRI, 3500K ◉ 840 - 80 CRI, 4000K ◯ 930 - 90 CRI, 3000K ◯ 935 - 90 CRI, 3500K ◯ 940 - 90 CRI, 4000K ◯ 8TW - 80 CRI, Tunable White ◯ 9TW - 90 CRI, Tunable White

MECHANICAL OPTIONS

Downlight	Reflector System	Voltage	Circuiting [3]
◉ F - Flush	◉ 96 - 96 Low Gloss	◉ 120 - 120 Voltage ◯ 277 - 277 Voltage ◯ 347 - 347 Voltage	◉ SC - Single Circuit

ELECTRICAL OPTIONS

Driver Selection [4]

0-10V Driver Options

- ◉ FC-10% - 0-10V 10% [5] (standard)
- ◯ FC-1% - 0-10V 1% [5]
- ◯ OSR-10% - Osram OTi, 0-10V 10% [5]
- ◯ OSR-1% - Osram OTi, 0-10V 1% [5]
- ◯ ELD-10V-0% - EldoLED SOLOdrive, 0-10V 0.1% [6]
- ◯ ELD-10V-1% - EldoLED SOLOdrive, 0-10V 1% [6]
- ◯ OSR-10V-TW - Osram OTi, 0-10V 10% *(Tunable White)* [5]

DALI Driver Options [6]

- ◯ FC-DALI-1% - DALI 1%
- ◯ OSR-DALI-1% - Osram Dexal, 1%
- ◯ ELD-DALI-0% - EldoLED SOLOdrive, DALI 0.1%
- ◯ ELD-DALI-TW - EldoLED DUALdrive LightShape, 1% *(Tunable White)*

DMX Driver Options

- ◯ FIN-DMX - Finelite DMX 1% *(Tunable White - FineTUNE Controls Only)* [7]

Lutron Driver Options [6]

- ◯ LUT-ES1 - Lutron, Ecosystem 1%
- ◯ LUT-ES5 - Lutron, Ecosystem 5%
- ◯ LUT-2W - Lutron, 2-wire (120v only) 1%
- ◯ LUT-TW - Lutron T-Series, EcoSystem 1% *(Tunable White)*

See Page 3 for additional driver options and details

MOUNTING TYPE

Mounting Method	Ceiling Hardware Type [10]
◉ FA50 - Fully Adjustable 50" [8] ◯ FA100 - Fully Adjustable 100" [8] ◯ FA150 - Fully Adjustable 150" [8] ◯ FA200 - Fully Adjustable 200" [8] ◯ FA250 - Fully Adjustable 250" [8] ◯ FA300 - Fully Adjustable 300" [8] ◯ SF - Spackle Flange [9]	◯ C1 - 1" T-Bar ◯ C2 - 9/16" T-Bar ◯ C3 - Screw Slot ◉ C4 - Hard Ceiling

OTHER OPTIONS

Finish	Emergency Style (Optional)	Special Options (Optional)
◯ SW - Signal White ◯ FB - Finelite Black [11] ◯ SA - Satin Aluminum [11] ◯ RAL - RAL Color Code _____ ◯ 99 - Custom Color [11]	◯ EM/GEN - Emergency to Generator	◯ CP - Chicago Plenum [8]

[1] Normal size
[2] Contact factory for tailored lumen output
[3] Contact factory for switching options
[4] See page 3 for more details
[5] Add DTO to gain "Dim to Off" functionality (FC-10% - DTO)
[6] 3' & 4' diameters only
[7] B & V outputs only
[8] Pendant only
[9] Recessed only
[10] Pendant and Surface Mount only
[11] 10-working day shipping not available

Protected by one or more US Patents: 8915613; D702,391; D702,390; D700,732

Finelite, Inc. • 30500 Whipple Road • Union City • CA 94587-1530 • 510-441-1100 • 510-441-1510 • www.finelite.com
© 2019 FINELITE, INC. ALL RIGHTS RESERVED. CTK0227 V3. 12/19
Due to continuing product improvements, Finelite reserves the right to change specifications without notice. Please visit www.finelite.com for the most current data.
A brand of legrand

Submitted by: Elders Electric		Date: January 2020	
Type: Option #3-(3) 2' Diameter	Project: Georgetown Township		
Ordering Info: HP 4C D P 2' S 840 F 96 120 SC FC-10% FA50 C4			

BUY AMERICAN ACT OF 2009 COMPLIANT

FINELITE® Better Lighting

High Performance 4" Aperture Circle (HP-4 C)

SUPPLEMENTARY DRIVER PAGE

0-10V Driver Options	
FC-10%	Factory choice 0-10V 10% Dimming (Linear)
FC-10%-DTO	Factory choice 0-10V 10% Dimming, Dim-to-Off (Linear)
FC-1%	Factory choice 0-10V 1% Dimming (Linear)
FC-1%-DTO	Factory choice 0-10V 1% Dimming, Dim-to-Off (Linear)
ELD-10V-0% [1]	EldoLED SOLOdrive, 0-10V 0.1% Dimming (Linear)
ELD-10V-1% [1]	EldoLED SOLOdrive, 0-10V 1% Dimming (Linear)
OSR-10vTW	Osram OTi, 0-10V 10% Dimming, *Tunable White* (Linear)
OSR-10vTW-DTO	Osram OTi, 0-10V 10% Dimming, Dim-to-Off, *Tunable White* (Linear)
OSR-10%	Osram OTi, 0-10V 10% Dimming (Linear)
OSR-10%-DTO	Osram OTi, 0-10V 10% Dimming, Dim-to-Off (Linear)
OSR-1%	Osram OTi, 0-10V 1% Dimming (Linear)
OSR-1%-DTO	Osram OTi, 0-10V 1% Dimming, Dim-to-Off (Linear)

DALI Driver Options [1]	
FC-DALI-1%	Factory choice DALI 1% Dimming (Logarithmic)
OSR-DALI-1%	Osram Dexal, DALI 1% Dimming (Logarithmic)
ELD-DALI-0%	EldoLED SOLOdrive, DALI 0.1% Dimming (Logarithmic)
ELD-DALI-1%	EldoLED SOLOdrive, DALI 1% Dimming (Logarithmic)
ELD-DALI-TW	EldoLED Dual Drive Light Shape, DALI 1% Dimming, *Tunable White* (Logarithmic Dimming, Linear CCT Control)

DMX Driver Options	
FIN-DMX [2]	Finelite DMX 1% Dimming, *Tunable White* - **FineTUNE Controls Only** (Linear)

Lutron Driver Options [1]	
LUT-ES1	Lutron, Ecosystem 1% Dimming
LUT-ES5	Lutron, Ecosystem 5% Dimming
LUT-2W	Lutron, 2-wire (120v only) 1% Dimming
LUT-TW	Lutron T-Series, EcoSystem 1% Dimming, *Tunable White*

[1] 3' & 4' diameters only
[2] B & V outputs only

Protected by one or more US Patents: 8915613; D702,391; D702,390; D700,732

Finelite, Inc. • 30500 Whipple Road • Union City • CA 94587-1530 • 510-441-1100 • 510-441-1510 • www.finelite.com © 2019 FINELITE, INC. ALL RIGHTS RESERVED. CTK0227 V3. 12/19
Due to continuing product improvements, Finelite reserves the right to change specifications without notice. Please visit www.finelite.com for the most current data.

A brand of legrand

Submitted by:	Elders Electric	Date:	January 2020
Type:	Option #3-(3) 2' Diameter	Project:	Georgetown Township
Ordering Info:	HP 4C D P 2' S 840 F 96 120 SC FC-10% FA50 C4		

BUY AMERICAN ACT OF 2009 COMPLIANT

FINELITE® Better Lighting

High Performance 4" Aperture Circle (HP-4 C)

SPECIFICATIONS

BODY TYPE

CONSTRUCTION: Precision-cut 6063-T4 extruded aluminum with 16 gauge steel assembly body.

SIZES: Circles are available in nominal diameters of 2', 3' and 4'.

ARRAY TYPE

LIGHT OUTPUT: Four lumen packages available, Standard (**S**), Boosted Standard (**B**), High (**H**), and Very High (**V**). A separate chart summarizes lumen distribution and wattage. Light engines are replaceable.

MECHANICAL FEATURES

DOWNLIGHT DIFFUSER: Single piece, seamless lens. Flush frost white snap-in lens standard, 80% transmissive, 99% diffusion.

LUMEN MAINTENANCE: 90% of initial light output (L90) at 100,000+ hours; 70% of initial light output (L70) at 200,000+ hours.

REFLECTORS: Die-formed 20-gauge cold-rolled steel reflectors finished in 96LG High Reflectance white powder coat paint.

ELECTRICAL FEATURES

STATIC FEED: Standard with one 18-gauge/5-conductor single-circuit feed.

TUNABLE WHITE FEED: Standard with one 18-gauge/5-conductor single-circuit feed. DMX and power feed at same location (standard). DMX feeds cannot be cut or spliced. DMX feeds should be ordered based on fixed lengths.

STATIC DRIVER: Replaceable 120V/277V Constant Current Reduction dimming driver standard. Can be wired dimming or non-dimming. 0-10V dimming controls with a range of 10%- 100% standard. Dimming to 1% available. Driver is fully accessible from below the ceiling. Power Factor: ≥0.9. Total Harmonic Distortion (THD) <20%. Expected driver lifetime: 100,000 hours.

LUTRON STATIC DRIVER OPTIONS [1]:
LUTES1 (Hi-lume 1% EcoSystem with Soft-On, Fade to Black dimming (LDE1 series)); **LUTES5** (5-Series 5% EcoSystem (LDE5 Series)); **LUT2W** (Hi-lume 1% 2-wire, 120V forward phase dimming (LTEA series))

TUNABLE WHITE DRIVER: Replaceable LED driver. Driver is accessible from below the ceiling. 120V/277V. Power factor ≥0.90. Total Harmonic Distortion (THD): <20%. Dimming Range: 100 - 1%. Expected driver lifetime: 100,000 hours.

LUTRON TUNABLE WHITE DRIVER OPTION [1]: LUTDTW (1% T-Series 2-Channel Digital Tunable White (PSQ Series)).

MOUNTING TYPE

MOUNTING: Pendant: 50" to 300" Fully Adjustable (**FA**) plated steel aircraft cable with safety stop hardware standard. Mounted with three equidistant vertical suspension cables. **Recessed Spackle Flange**: Drywall surfaces (walls or ceilings): 1/4 - 20 stud and nut (provided by others). Mounted with three equidistant suspension points. **Surface Mount**: Lay-in ceiling types: caddy clip with 1/4 - 20 stud and nut. Drywall or concrete surfaces (walls or ceilings): 1/4 - 20 stud and nut (provided by others). Mounted with three equidistant suspension points.

TUNABLE WHITE DMX MOUNTING: For grid ceiling applications the dual GridBox™ mounting is supplied (standard). For hard ceiling applications the ceiling mounting box is supplied (standard). DMX feeds cannot be cut or spliced. DMX feeds should be ordered based on fixed lengths. Available DMX pendant feed lengths are 5', 12', and 30' (5' standard).

TUNABLE WHITE DMX INTERCONNECTION CABLES: Luminaires are prewired with plug-and-play interconnection cables to support easy plug-together joining of fixture runs. If a non-FineTune DMX system has been specified, a DMX to RJ45 converter is provided.

OTHER FEATURES

ELECTRICAL: Optional emergency to generator/inverter wiring.

FINISHES: Finelite Signal White (**SW**) powder coat standard. Finelite Black (RAL 9005) with semi gloss fine texture (**FB**)[2] and Satin Aluminum (**SA**)[2] are available. Optional Adders: 185 RAL colors[2].

TUNABLE WHITE ELECTRICAL:
- Emergency Option DALI: emergency-to-generator/ Inverter wiring
- Emergency Option LUTRON: emergency-to-generator/ inverter wiring

LABELS: Luminaire and electrical components are ETL-listed conforming to UL 1598 in the U.S.A. and CAN/CSA C22.2 No. 250.0 in Canada. In accordance with NEC Code 410.130 (G), this luminaire contains an internal driver disconnect. UL 2108 - PoE options available on request, contact factory for more details. These fixtures are rated for Damp Location. Finelite products use electronic components that are RoHS compliant, and the mechanical components of the luminaire have been verified to not knowingly contain any restricted substances listed per RoHS Directive 2015/863/EU.

WEIGHTS: Direct (pendant and surface mount): 2' = 37 lbs, 3' = 56 lbs, 4' = 76 lbs; Recessed (spackle flange): 2' = 40 lbs, 3' = 60 lbs, 4' = 82 lbs.

WARRANTY: 10-year performance-based warranty on all standard components. Optional accessories are covered by their individual manufacturer warranties.

[1] 3ft & 4ft only
[2] 10-working day shipping not available

Protected by one or more US Patents: 8915613; D702,391; D702,390; D700,732

Finelite, Inc. • 30500 Whipple Road • Union City • CA 94587-1530 • 510-441-1100 • 510-441-1510 • www.finelite.com
© 2019 FINELITE, INC. ALL RIGHTS RESERVED. CTK0227 V3. 12/19
Due to continuing product improvements, Finelite reserves the right to change specifications without notice. Please visit www.finelite.com for the most current data.
A brand of legrand

Submitted by: Elders Electric		Date: January 2020	
Type: Option #3-(3) 2' Diameter	Project: Georgetown Township		
Ordering Info: HP 4C D P 2' S 840 F 96 120 SC FC-10% FA50 C4			

BUY AMERICAN ACT OF 2009 COMPLIANT

FINELITE® Better Lighting

High Performance 4" Aperture Circle (HP-4 C)

Static White Photometry - 4' Circle

HP-4C-D-P-4'-V-835
Efficacy: 100 lm/W
Total luminaire output: 11311 lumens
113 watts (9.0 watts/foot [3])
Peak Candela Value: 1251 @ 0°
CRI: 80
CCT: 3500K
ITL LM79 Report 91221

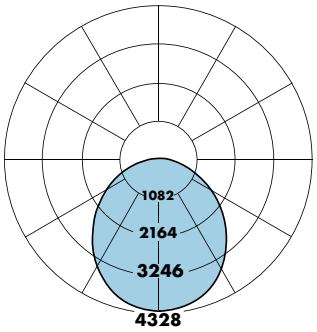

CANDELA DISTRIBUTION

	0.0	22.5	45.0	67.5	90.0	FLUX
0	1251	1251	1251	1251	1251	
5	1243	1244	1247	1249	1250	119
15	1187	1188	1204	1210	1210	338
25	1077	1082	1106	1116	1117	507
35	924	940	973	986	987	603
45	752	779	818	836	841	623
55	569	604	651	677	683	572
65	382	425	477	510	520	462
75	199	249	307	345	358	312
85	50	104	165	206	219	170
90	10	61	120	160	173	
95	8	57	111	147	159	109
105	6	48	96	127	138	91
115	5	39	82	109	118	72
125	4	30	66	89	97	53
135	3	21	50	69	76	35
145	2	12	32	50	55	19
155	1	5	17	30	34	8
165	1	1	6	11	15	2
175	0	0	0	0	0	0
180	0	0	0	0	0	

Total Light Output, 3500K, 80 CRI (Lumens)

	S [1]	B [1]	H [1]	V [2]
2'	2377	2988	4516	5806
3'	3934	4945	7474	9610
4'	4630	5821	8797	11311

Power, 3500K (Watts Per Foot) [3]

	S [1]	B [1]	H [1]	V [2]
2'	3.6	4.6	7.1	9.2
3'	4.0	5.1	7.8	10.2
4'	3.5	4.5	6.9	9.0

Efficacy, 3500K, 80 CRI (Lumens Per Watt)

	S [1]	B [1]	H [1]	V [2]
2'	105	104	101	100
3'	105	104	101	100
4'	105	104	101	100

Sample Lumen Adjustment Calculation

Lumen Adjustment Factors 80 CRI

3000K	0.985
3500K	1.000
4000K	1.032

Lumen Adjustment Factors 90 CRI

3000K	0.746
3500K	0.760
4000K	0.789

High Output (**H**), 2', 4000K, 90 CRI

Lumen Adjustment Factor: 0.789

Total Light Output: 4516 lm x 0.789 = 3563 lm

Total Light Output per Foot: 717 lm/ft x 0.789 = 566 lm/ft.

watts/foot: 7.1 W/ft.

$$\textbf{Efficacy} = \frac{566\ \frac{\text{lm}}{\text{ft.}}}{7.1\ \frac{\text{W}}{\text{ft.}}} = 80\ \text{lm/W}$$

S - Standard Output, B - Boosted Standard Output, H - High Output, V - Very High Output

[1] Family Correlation based on 4' Circle, 3500K, Very High Output (V) test - 120V.
[2] Based on ITL report: 91221
[3] Watts per foot calculated using approximate outer circumferences of 6.3', 9.4', & 12.6' respectively for 2', 3', & 4' circles

Protected by one or more US Patents: 8915613; D702,391; D702,390; D700,732

Finelite, Inc. • 30500 Whipple Road • Union City • CA 94587-1530 • 510-441-1100 • 510-441-1510 • www.finelite.com
© 2019 FINELITE, INC. ALL RIGHTS RESERVED. CTK0227 V3. 12/19
Due to continuing product improvements, Finelite reserves the right to change specifications without notice. Please visit www.finelite.com for the most current data.
A brand of legrand

Submitted by:	Elders Electric	Date:	January 2020
Type:	Option #3-(3) 2' Diameter	Project:	Georgetown Township
Ordering Info:	HP 4C D P 2' S 840 F 96 120 SC FC-10% FA50 C4		

BUY AMERICAN ACT OF 2009 COMPLIANT

FINELITE® Better Lighting

0-10V Tunable White

Finelite's award-winning, contractor friendly Tunable White luminaires are available at low cost, with powerful and simple 0-10V tuning and intensity controls.

TUNABLE WHITE FEATURES

- CCT range: 2700K - 6500K
- Dimming Range: 100% to 10%
- CRI Options: 80 CRI or 90 CRI

PHOTOMETRY

Apply a power adjustment factor to calculate wattage usage

POWER	CONVERSION FACTOR
	1.1X

(Example: a 50 watt luminaire in static white would draw 55 watts using 0-10V Tunable White)

WIRING DIAGRAM - DIMMABLE TO 10%

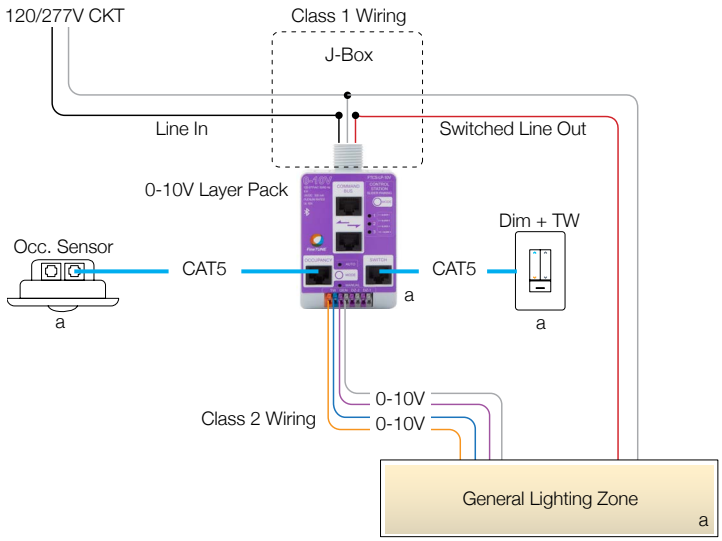

Luminaire Wiring

- **Purple** (+) / **Gray** (-) control wires are for intensity control
- **Orange** (+) / **Blue** (-) control wires are for Tunable White control

Note:
Load or Dim to Off options available.

DUAL FEED DETAIL

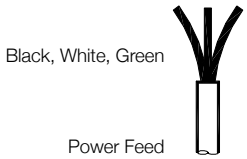

WIRING LEGEND		
Black	Hot	Line Voltage
White	Neutral	Line Voltage
Green	Ground	

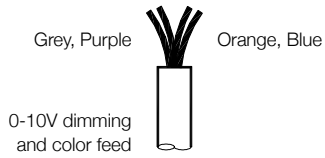

WIRING LEGEND		
Grey	Dimming	0-10V DC
Purple	Dimming	0-10V DC
Orange	TW	0-10V DC
Blue	TW	0-10V DC

Tunable White LUMINAIRES

Protected by one or more US Patents: 8915613; D702,391; D702,390; D700,732

Finelite, Inc. • 30500 Whipple Road • Union City • CA 94587-1530 • P: 510-441-1100 • F: 510-441-1510 • www.finelite.com © 2019 FINELITE, INC. ALL RIGHTS RESERVED. CTK0245. 12/19
Due to continuing product improvements, Finelite reserves the right to change specifications without notice. Please visit www.finelite.com for the most current data.

A brand of legrand

Georgetown Township

Bid Date: January 23, 2020 **Bid Time** 10:00 AM

Owner: Georgetown Charter Township

Project Title: 2020 DPW Pick-Up Truck

Dealer	Bid Amount	Additional Info
Todd Wenzel Chevrolet	**$27,498.00**	
Preferred Chevrolet		
Betten Baker Dodge		
Crown Motors CDJ	**$26,498.00**	
Ziegler Dodge		
Fox Ford		
Keller Ford		
Barber Ford	**$29,009.00**	
Borgman Ford		
Fox Buick GMC	**$39,757.25**	
Elhart GMC		
Preferred GMC		
Berger Chevrolet	**$26,895.00**	

Georgetown Charter Township, 1515 Baldwin St., Jenison, MI 49428
Phone: (616) 457-2340 www.georgetown-mi.gov

1/28/2020

A Veteran Helping Veteran, Inc is a Veteran run non-profit based in Jenison, MI. A Veteran Helping Veteran (AVHV) would like to have a Raffle drawing at the Veteran and First Responder Festival Event we are hosting on May 9th, 2020 in Hudsonville, MI. AVHV has turned in the paperwork with Georgetown Township for them to fill out so that we can apply for the Gaming License with the State of Michigan.

At this time, we do not know what items or the total dollar amount of the raffle items. As we need the approval from the state before we can advertise for a raffle or ask for donations. Examples could include items from Fastenal, local restaurants, etc… Where the total combined amount will exceed the $100 total value that the state has deemed necessary to have a license. Please see attached form for reference (page 4, #7 iv), we do not qualify for that exemption, so we need a license.

Thank you,

A Veteran Helping Veteran, Inc

3285 Bauer Rd

Jenison, MI 49428

910.583.6576 Adam Small, Founder and President