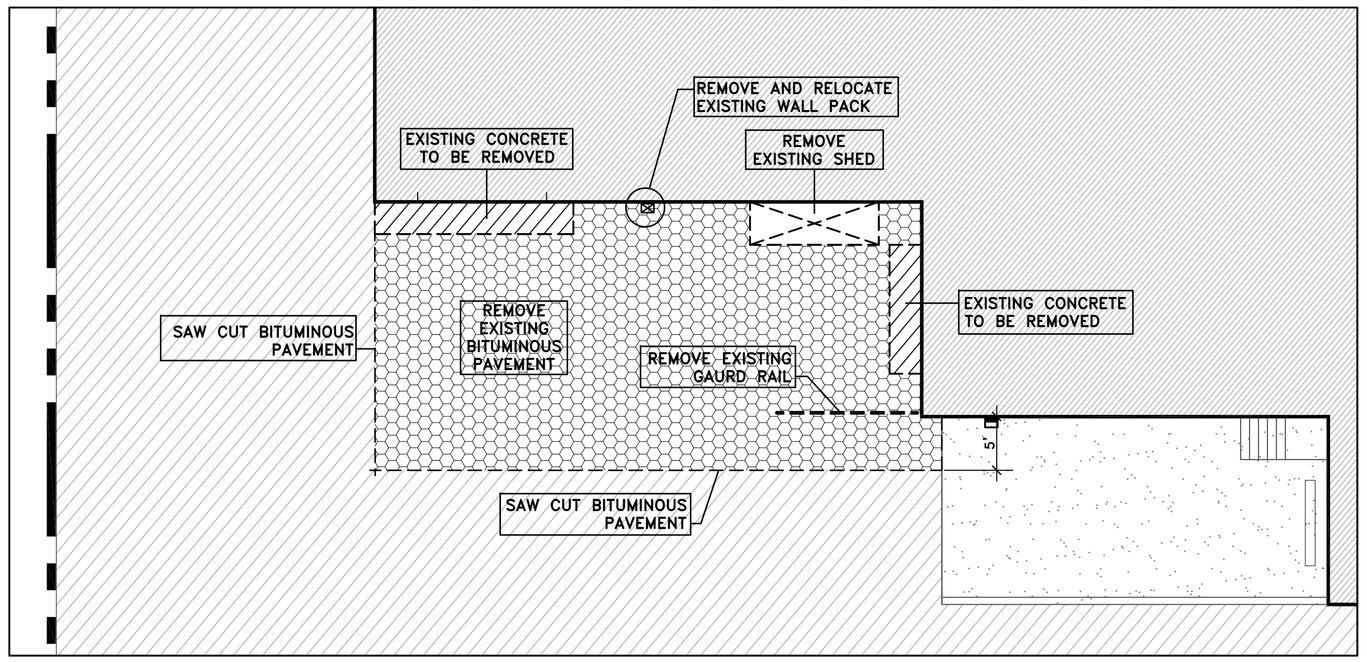

ENLARGED PARTIAL SITE DEMOLITION PLAN

SCALE: 1"=10'-0"

LEGEND

- BITUMINOUS PAVEMENT TO BE REMOVED
- CONCRETE PAVEMENT TO BE REMOVED
- EXISTING BUILDING
- EXISTING BITUMINOUS PAVEMENT
- EXISTING CONCRETE PAVEMENT
- CONTROL JOINT
- PROPOSED 6" CONCRETE PAVEMENT
- PROPOSED BUILDING ADDITION
- PROPOSED 6" CONCRETE WITH ONE LAYER OF 4x4 W2.6xW2.6 WWF 4000 P.S.I. 28 DAYS LIMESTONE COARSE AGGREGATE AIR ENTRAINED
- 98.99 + EXISTING SPOT ELEVATIONS
- + 99.80 PROPOSED SPOT ELEVATIONS
- PROPOSED FLOW ARROW

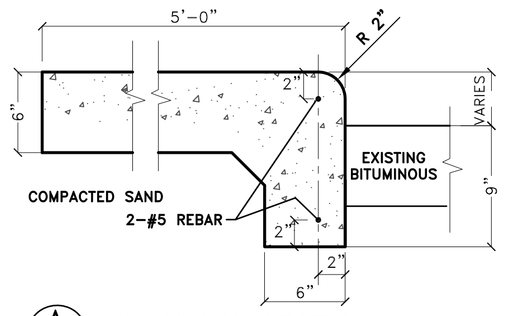

A/C1 WALKWAY SECTION

SCALE: 1" = 1'-0"

4000 P.S.I. 28 DAYS
LIMESTONE COARSE AGGREGATE AIR ENTRAINED

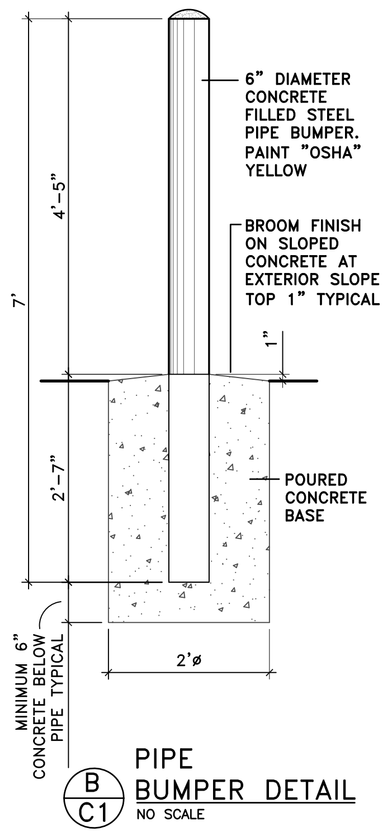

B/C1 PIPE BUMPER DETAIL

NO SCALE

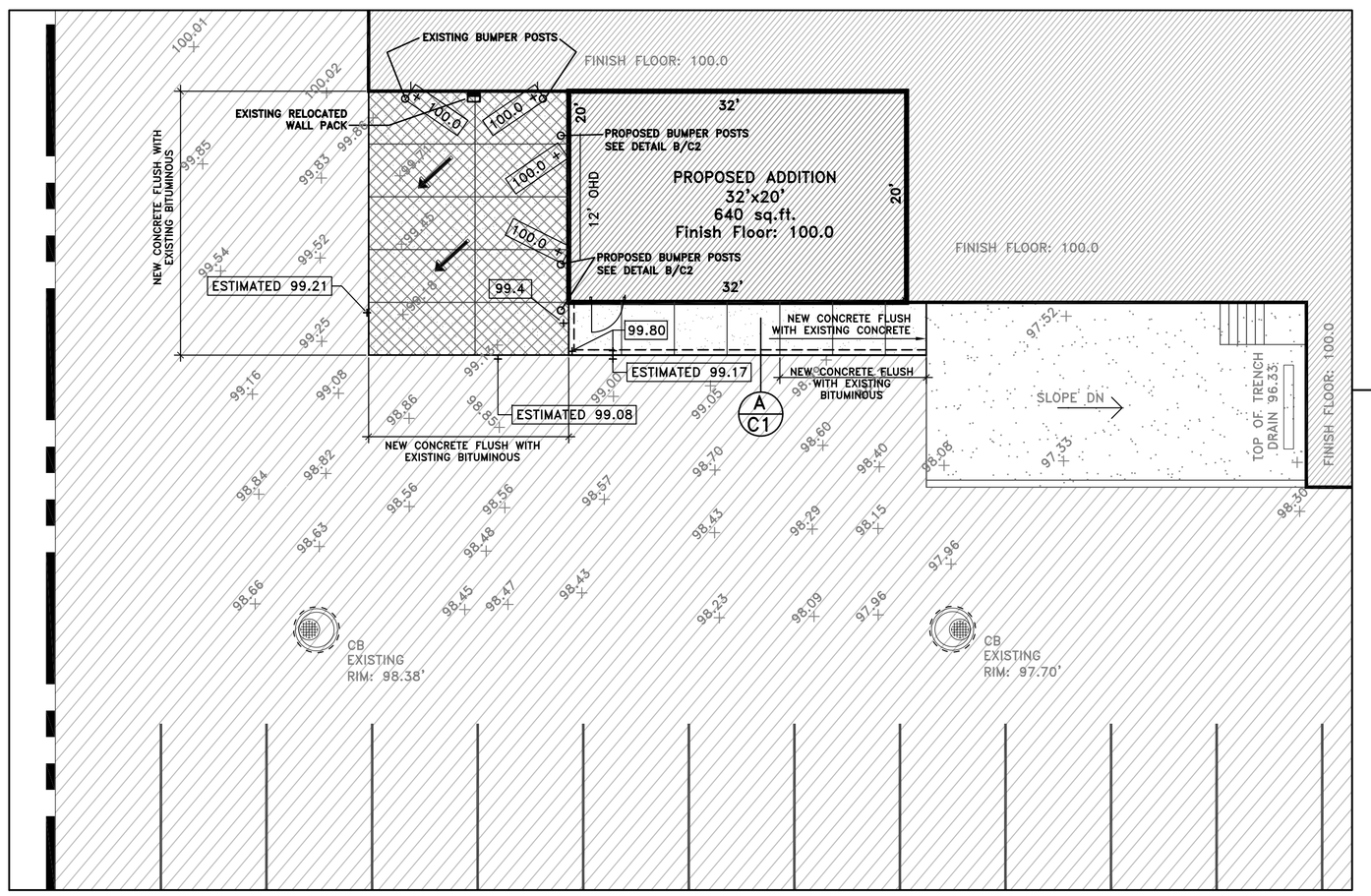

ENLARGED PARTIAL SITE PLAN

SCALE: 1"=10'-0"

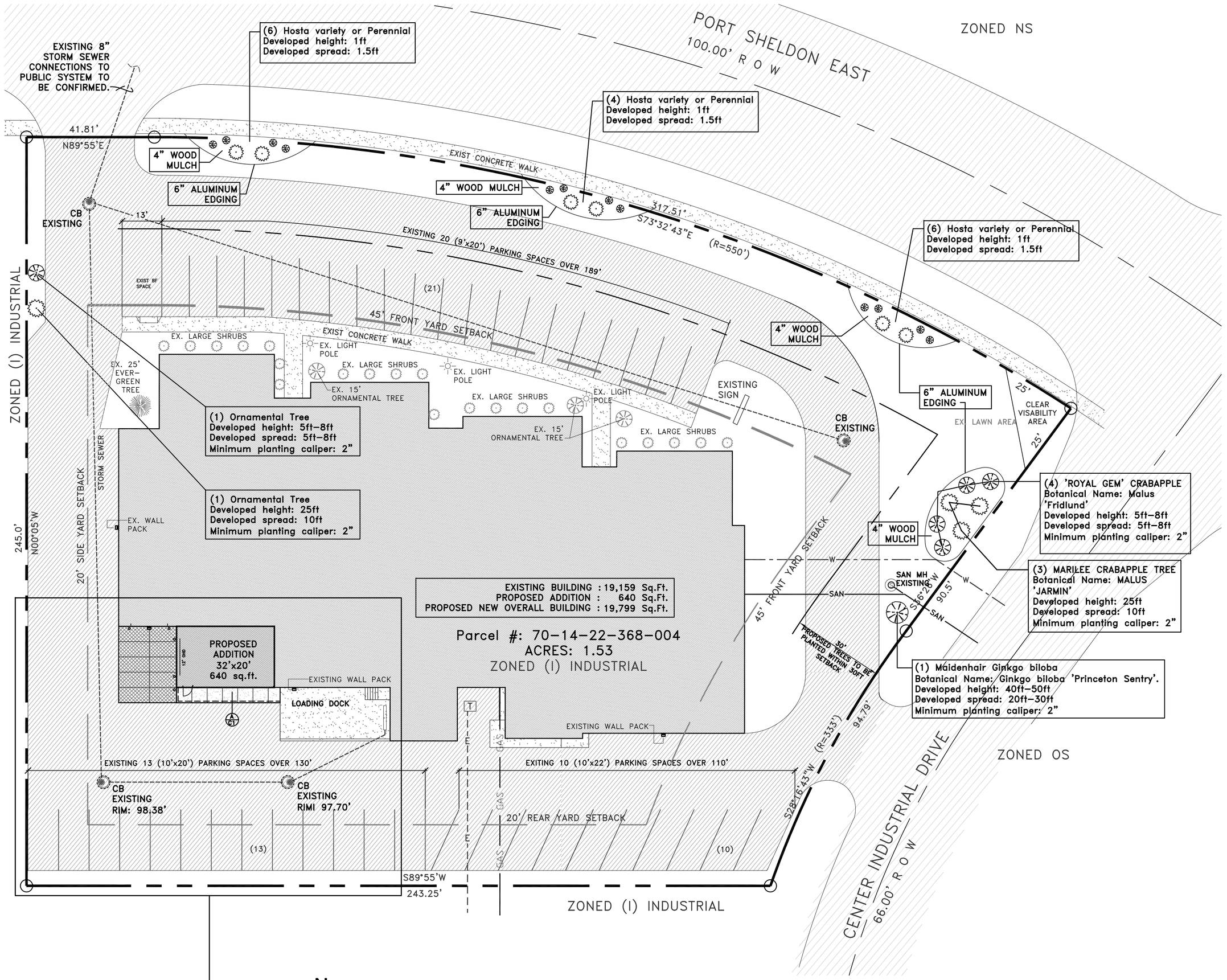

OVERALL SITE PLAN

SCALE: 1"=20'-0"

PARKING CALCULATIONS	
USE	REQUIRED PARKING SPACES
EXISTING OFFICE SPACE 4,559 Sq.Ft./300 =	16 (15.2)
MANUFACTURING SPACE EXISTING 14,600 Sq.Ft. PROPOSED 640 Sq.Ft. 15,240 Sq.Ft. 15,240 Sq.Ft./750 =	21 (20.3)
TOTAL REQUIRED PARKING SPACES =	37
TOTAL PARKING SPACES PROVIDED =	44

RP

RICHARD POSTEMA ASSOCIATES
ARCHITECTS, DESIGNERS, & ENGINEERS
PH. 616 531 3850
1580 44th ST., S.W.
GRAND RAPIDS, MICHIGAN 49509

ADVANTAGE INDUSTRIES, INC.
2196 PORT SHELDON ROAD, JENISON, GEORGETOWN TOWNSHIP

© COPYRIGHT
All rights reserved
This drawing was authored for use in the construction of a specific project. Any other use, duplication, copying and/or modifications are strictly prohibited except by expressed written consent of Richard Postema Associates P.C.

JOB NO.
486318

DATE
2-27-19
3-1-19
3-15-19
3-25-19 CLEAR VISION AREA ADDED
REVIEW: 6-5-19
6-7-19

SHEET NO.
C1